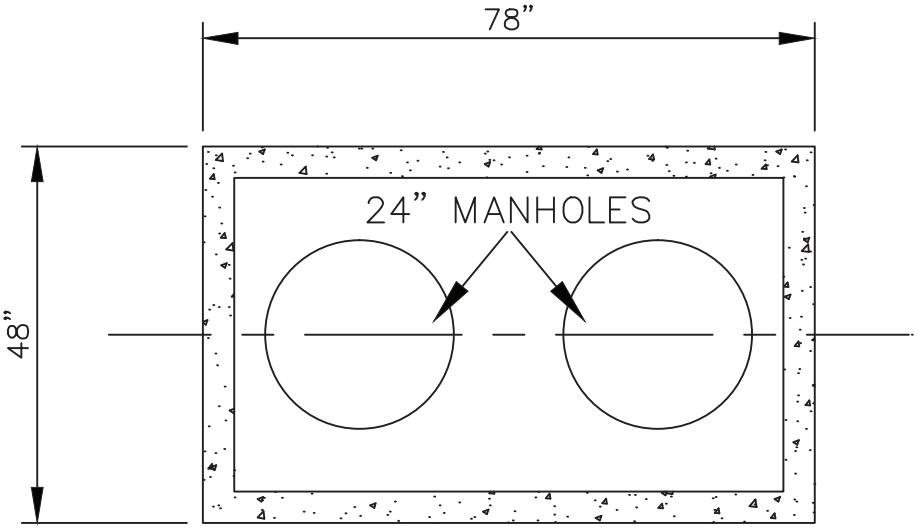

PLAN VIEW

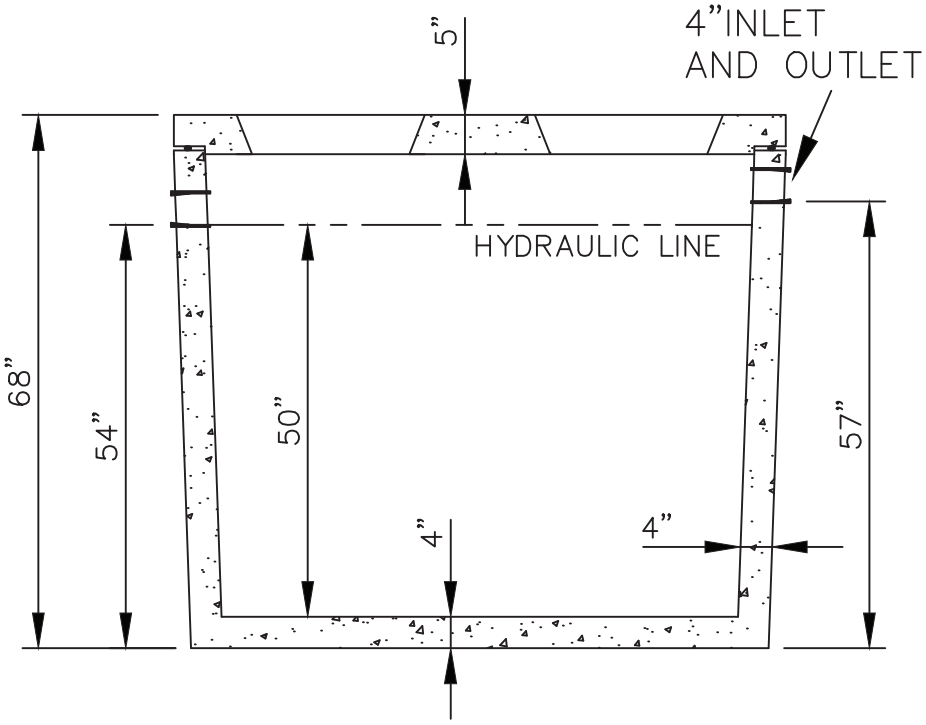

SECTION VIEW

NOTE: BAFFLES INSTALLED BY CUSTOMER

Non-Traffic Rated, 4 Feet Maximum Cover. Risers, Riser Lids, Pipes & Fittings Sold Separately

PRECAST TRANSPORTATION SOLUTIONS

322 Bynum Road
Forest Hill, Maryland 21050
Phone: 410-838-3007

STANDARD PROFILE
PRECAST 500 GALLON SEPTIC TANK
SINGLE COMPARTMENT

www.precasttransportationsolutions.com